IF IN DOUBT, PLEASE ASK | DO NOT SCALE | ALL DIMENSIONS ARE IN mm

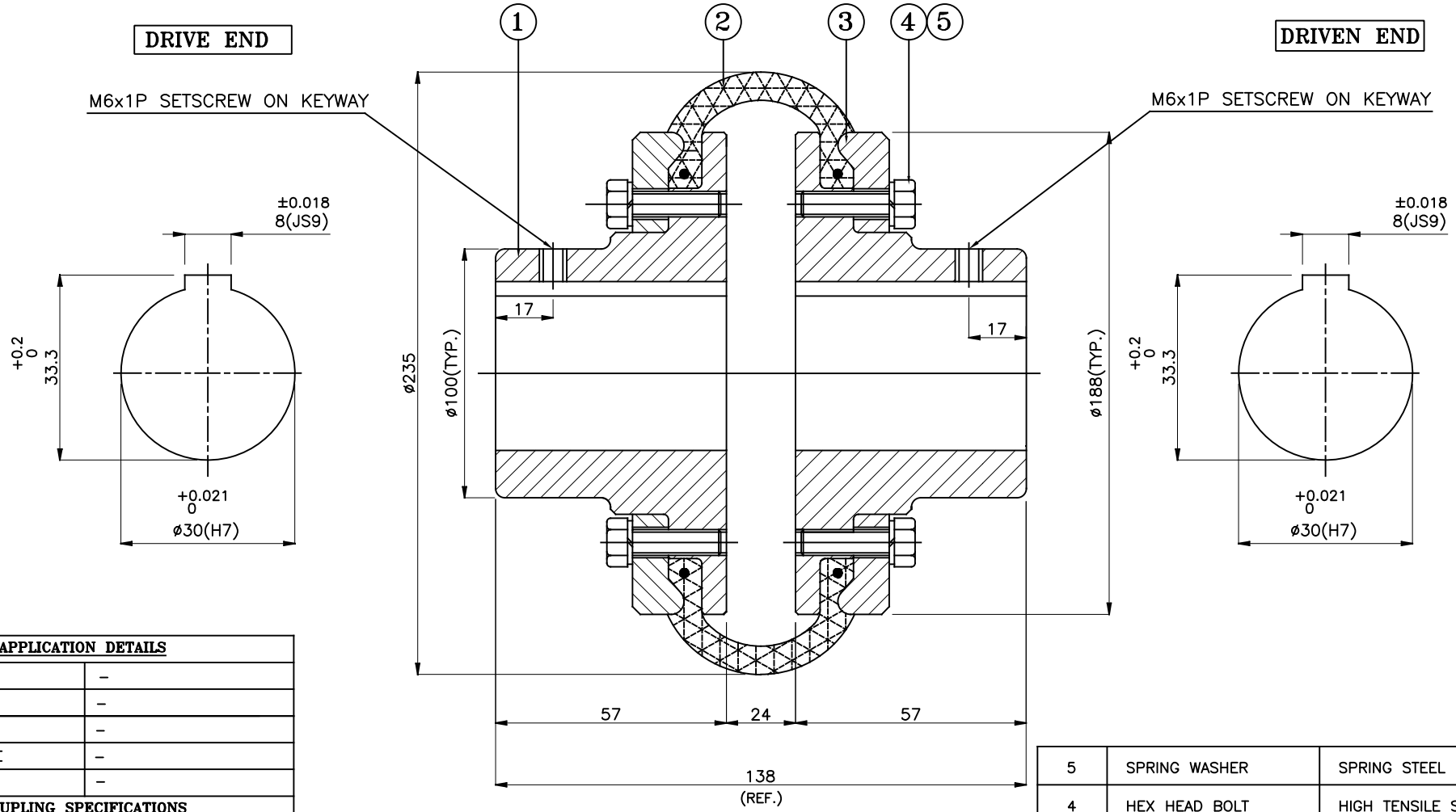

APPLICATION DETAILS	
APPLICATION	–
RATED POWER	–
RATED SPEED	–
RATED TORQUE	–
A.S.F.	–
COUPLING SPECIFICATIONS	
COUPLING RATING	5.24 kW @ 100 RPM
RATED TORQUE	0.50 kNm.
PEAK TORQUE	1.01 kNm.
MAX. SPEED	3000 rpm.
MAX. BORE	75 mm
WEIGHT(Approx.)	14.37 Kg
INERTIA (WK^2)	0.065 Kgm^2
COUPLING HUBS DYNAMICALLY BALANCED TO GR.6.3 AS PER ISO: 1940–1.	
MAX. MISALIGNMENTS	
AXIAL DEFLECTION	±3.0 mm.
ANGULAR DEFLECTION	2°
RADIAL DEFLECTION	2.4 mm

SR NO	DESCRIPTION	MATERIAL	QTY.
5	SPRING WASHER	SPRING STEEL	12
4	HEX HEAD BOLT	HIGH TENSILE STEEL	12
3	CLAMPING RING	S.G. IRON–400/15	2
2	TYRE	NATURAL RUBBER	1
1	HUB	CI IS–210 GR.FG 260	2

REV.	DMRN NO.	DESCRIPTION	REV. BY	APPD. BY	DATE

TITLE: T0–9 B /---- CPLG.

MATERIAL: REFER TABLE

CUSTOMER NAME:

AUTHORITY	INITIALS	SIGN	DATE
DRAWN	–		–
CHECKED	–		–
APPROVED	–		–

SCALE: NTS

REF. No.: –

Lovejoy INDIA

RATHI TRANSPOWER PVT LTD
PUNE 411006

DRG. No.: ----

This drawing / information / design is the property of Rathi Transpower Pvt. Ltd. It is confidential & must not be made public or copied without prior written authorization & is subjected to recall at any time. Acceptance of this drawing constitutes full agreement with these conditions