IF IN DOUBT, PLEASE ASK | DO NOT SCALE | ALL DIMENSIONS ARE IN mm

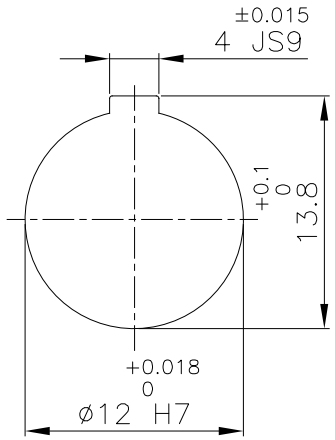

DRIVE SIDE

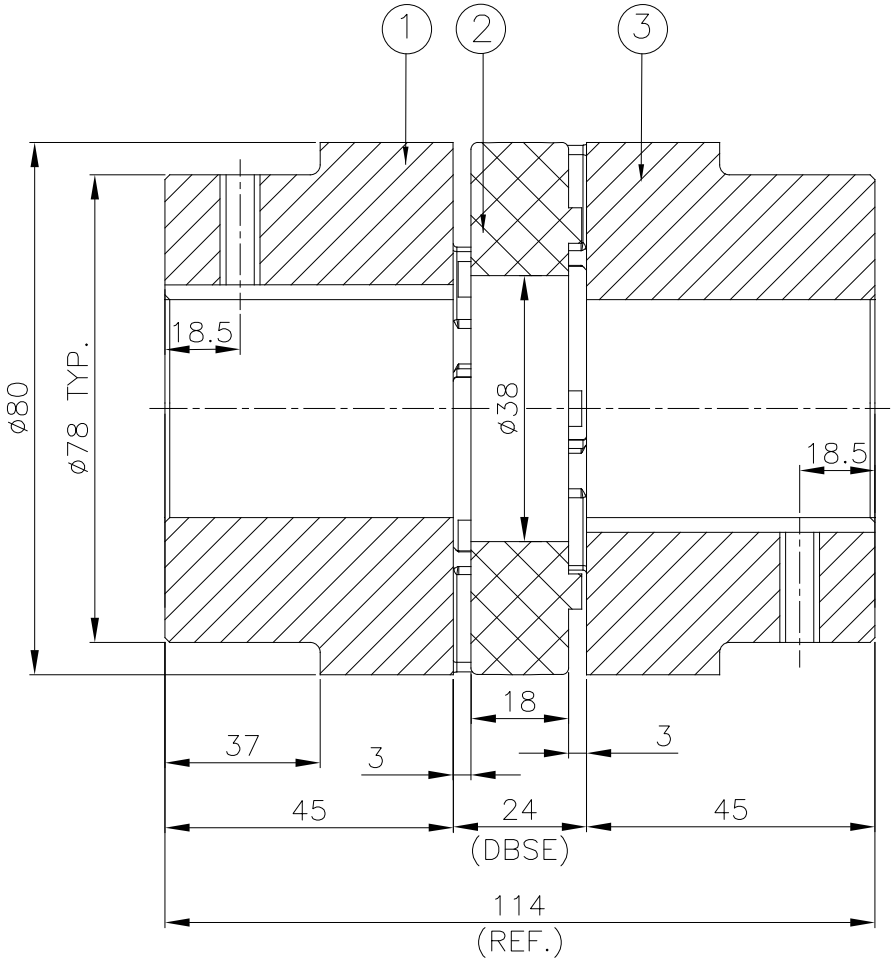

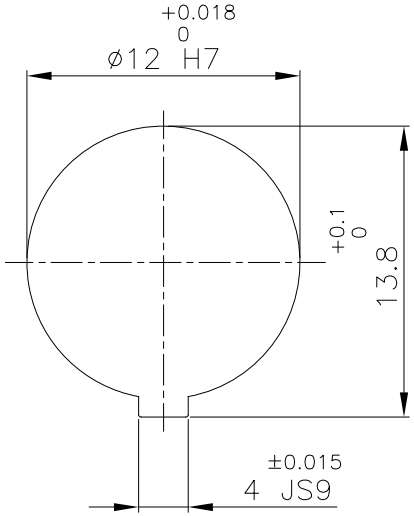

DRIVEN SIDE

APPLICATION DETAILS	
APPLICATION	–
RATED POWER	– KW
RATED SPEED	– RPM.
RATED TORQUE	– Nm
A.S.F.	–
COUPLING CAPACITY	
COUPLING RATING	3.47KW AT 100RPM.
RATED TORQUE	332 Nm
MAX. BORE TYPE–II	48mm
WEIGHT (APPROX)	2.4kg
INERTIA (WK^2)	2.45×10^{-3} kg–m^2
MAX. MISALIGNMENT	
AXIAL	±2.2mm
ANGULAR	0.90°
PARALLE	0.25mm

SR NO	DESCRIPTION	MATERIAL	QTY.
3	HUB–I	C.I IS:210	1
2	SPIDER	POLYURETHANE (BLUE)	1
1	HUB–I	C.I IS:210	1

REV.	DMRN NO.	DESCRIPTION	REV. BY	APPD. BY	DATE

TITLE: RRJ–38 II/II /---- CPLG.

MATERIAL: REFER TABLE

CUSTOMER NAME: -

AUTHORITY	INITIALS	SIGN	DATE
DRAWN	–		–
CHECKED	–		–
APPROVED	–		–

SCALE: NTS | REF. No.:

RATHI — RATHI TRANSPOWER PVT LTD PUNE 411014

DRG. No.: -----/-

This drawing / information / design is the property of Rathi Transpower Pvt. Ltd. It is confidential & must not be made public or copied without prior written authorization & is subjected to recall at any time. Acceptance of this drawing constitutes full agreement with these conditions