IF IN DOUBT, PLEASE ASK | DO NOT SCALE | ALL DIMENSIONS ARE IN mm

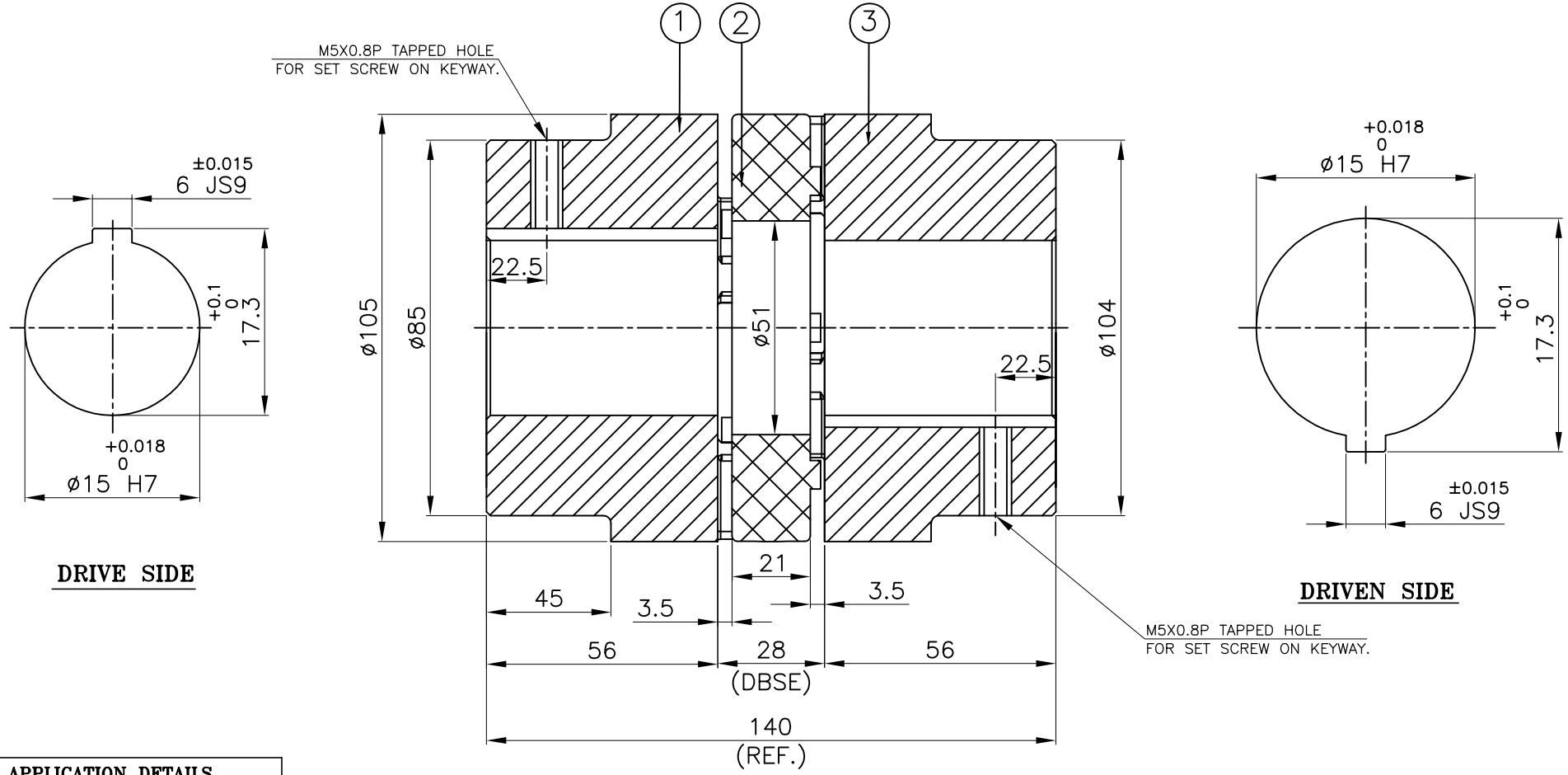

APPLICATION DETAILS	
APPLICATION	–
RATED POWER	– KW
RATED SPEED	– RPM.
RATED TORQUE	– Nm
A.S.F.	–
COUPLING CAPACITY	
COUPLING RATING	5.49KW AT 100RPM.
RATED TORQUE	525Nm
MAX. BORE TYPE–I & II	52 & 62mm
WEIGHT (APPROX)	5.2kg
INERTIA (WK^2)	9.6×10^{-3} kg–m^2
MAX. MISALIGNMENT	
AXIAL	±3.0mm
ANGULAR	1°
PARALLE	0.35mm

SR NO	DESCRIPTION	MATERIAL	QTY.
3	HUB–II	C.I. IS:210 FG 260	1
2	SPIDER	POLYURETHANE (BLUE)	1
1	HUB–I	C.I. IS:210 FG 260	1

REV.	DMRN NO.	DESCRIPTION	REV. BY	APPD. BY	DATE

TITLE: RRJ–48 I/II /---- CPLG.

MATERIAL: REFER TABLE

CUSTOMER NAME: -

AUTHORITY	INITIALS	SIGN	DATE
DRAWN	–		–
CHECKED	–		–
APPROVED	–		–

SCALE: NTS | REF. No.:

RATHI TRANSPOWER PVT LTD
PUNE 411014

DRG. No.: -----/–

This drawing / information / design is the property of Rathi Transpower Pvt. Ltd. It is confidential & must not be made public or copied without prior written authorization & is subjected to recall at any time. Acceptance of this drawing constitutes full agreement with these conditions

– 0/ 3 EN–F–112