IF IN DOUBT, PLEASE ASK | DO NOT SCALE | ALL DIMENSIONS ARE IN mm

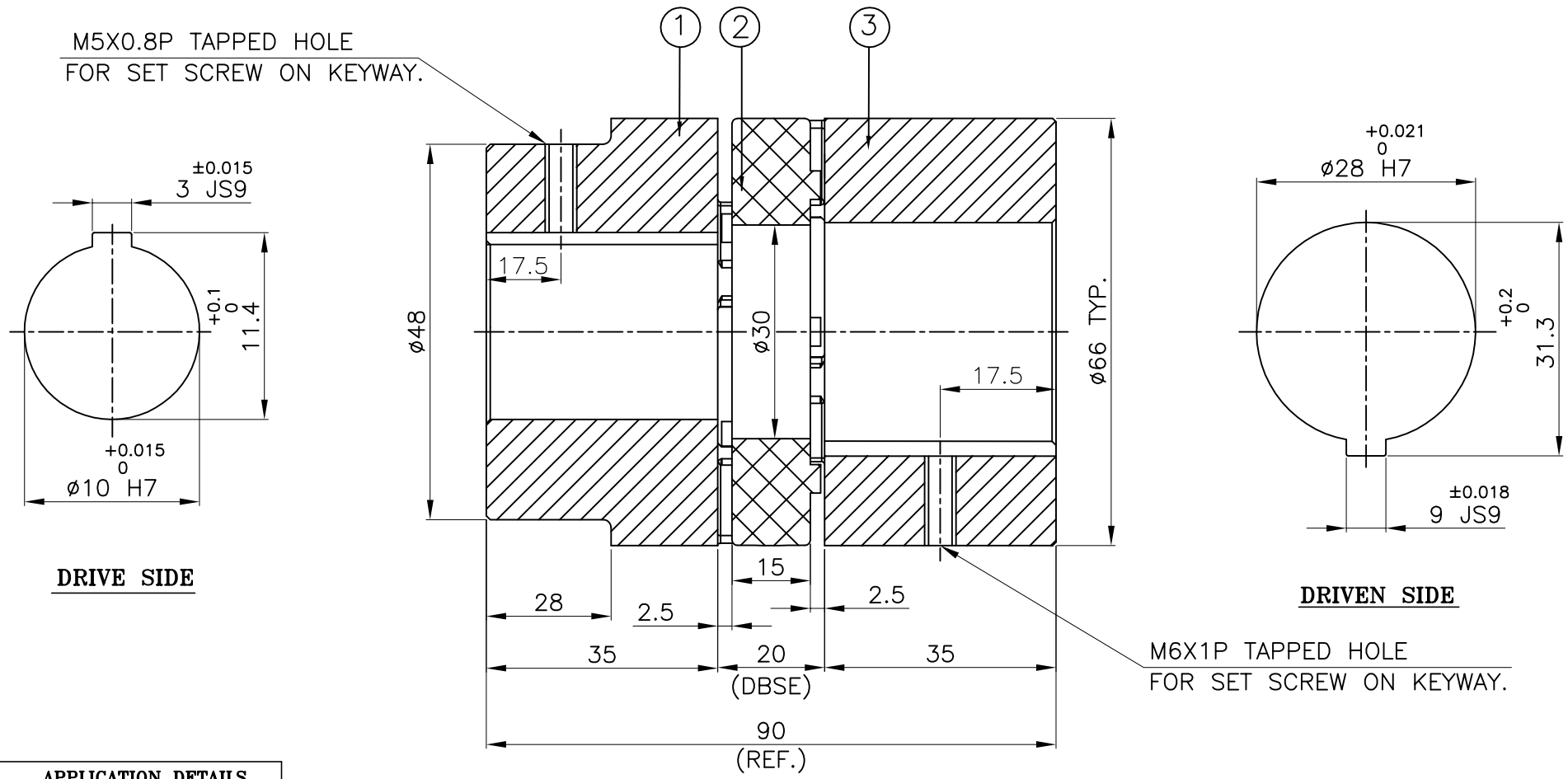


| APPLICATION DETAILS | |
|---|---|
| APPLICATION | – |
| RATED POWER | – KW |
| RATED SPEED | – RPM. |
| RATED TORQUE | – Nm |
| A.S.F. | – |
| **COUPLING CAPACITY** | |
| COUPLING RATING | 2.07KW AT 100RPM. |
| RATED TORQUE | 197 Nm |
| MAX. BORE TYPE–I & II | 28 & 38mm. |
| WEIGHT (APPROX) | 0.54kg |
| INERTIA ($WK^2$) | $42X10^{-5}$ kg–m $^2$ |
| **MAX. MISALIGNMENT** | |
| AXIAL | ±2.0mm |
| ANGULAR | 0.80° |
| PARALLE | 0.20mm |

| SR NO | DESCRIPTION | MATERIAL | QTY. |
|---|---|---|---|
| 3 | HUB–II | ALUMINIUM | 1 |
| 2 | SPIDER | POLYURETHANE (LIGHT IVORY) | 1 |
| 1 | HUB–I | ALUMINIUM | 1 |

| REV. | DMRN NO. | DESCRIPTION | REV. BY | APPD. BY | DATE |
|---|---|---|---|---|---|
| | | | | | |

TITLE: RRJ–28 I/II /---- CPLG.

MATERIAL: REFER TABLE

CUSTOMER NAME: -

| AUTHORITY | INITIALS | SIGN | DATE |
|---|---|---|---|
| DRAWN | – | | – |
| CHECKED | – | | – |
| APPROVED | – | | – |

SCALE: NTS | REF. No.:

RATHI TRANSPOWER PVT LTD
PUNE 411014

DRG. No.: -----/-

This drawing / information / design is the property of Rathi Transpower Pvt. Ltd. It is confidential & must not be made public or copied without prior written authorization & is subjected to recall at any time. Acceptance of this drawing constitutes full agreement with these conditions

– 0/ 3 EN–F–112