POLYGEAR COUPLINGS
Type - RPS

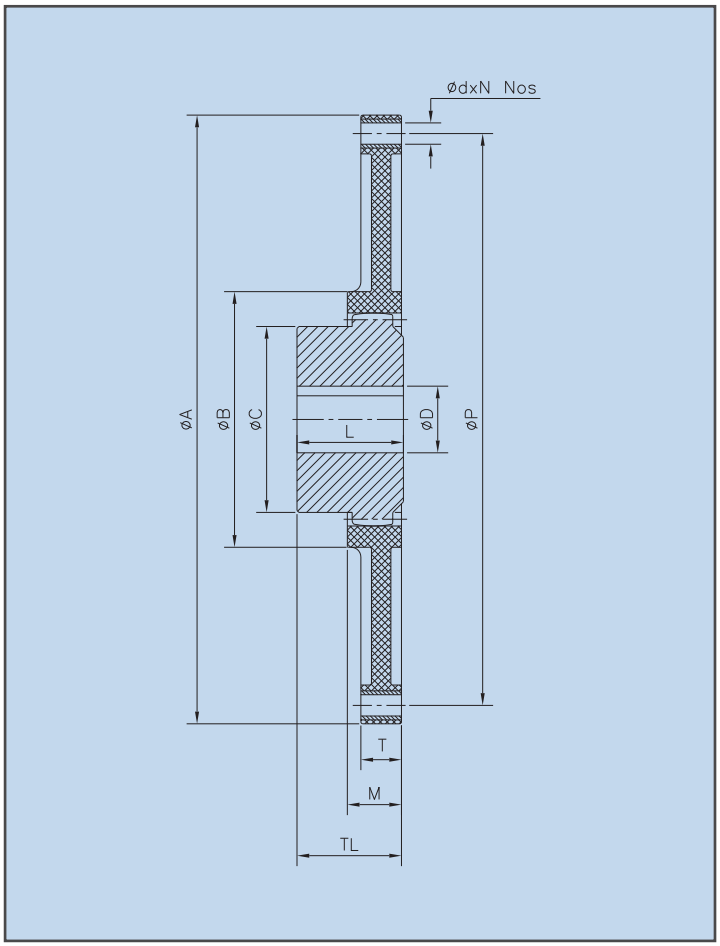

Product Features
- Torsionally rigid curved-tooth flange coupling.
- Resonance-free operation.
- Maintenance-free due to material combination nylon/steel.

Applications
- Harvesting machines.
- Construction machines.
- I.C.- engines driven hydraulic pump.
- Compressor driven hydraulic pump.

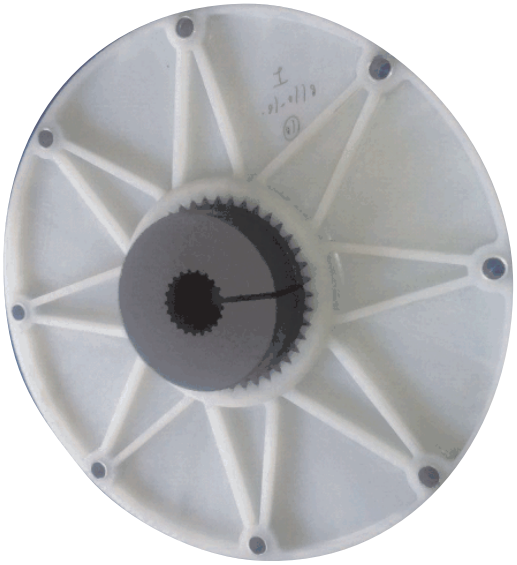

TECHNICAL DATA

Coupling Size	Power kW @ 100 rpm	Torque Nm (TK_N)	Speed rpm (Max.)	Bore		Dimensions						Assembly		
				D (Pilot)	D (Max)	B	C	L	M	T	TL	Weight Kg (Max Bore)	MI (Kg-m2) (Max Bore)	Axial Displacement ± (Max)
04	3.14	300	3800	10	48	100	68	50	20	13	50	2.7	0.0052	2
06	8.38	800	3400	10	65	131.5	96	55	27	21	54	5.7	0.0165	2
07	10.47	1000	3400	26	70	153	100	60	30	21	56	4.5	0.0131	2
08	15.70	1499	3400	31	80	170	124	90	30	21	87	10.0	0.0428	2
10	26.18	2500	2550	38	100	265	152	110	35	21	108	18.3	0.1261	2
12	44.51	4250	2550	45	125	250	192	140	50	28	133	21.1	0.1453	2

SAE Flanged Details					"Coupling Size (Recommended)"
Size	A	d	P	N	
6 1/2”	215.9	8.5	200.02	6	04
7 1/2”	241.3	8.5	222.25	8	04
8”	263.52	10.5	244.47	6	04, 06
10”	314.32	10.5	295.27	8	04, 06, 07, 08
11 1/2”	352.42	10.5	333.37	8	06, 08, 10, 12
14”	466.72	14.0	438.15	8	10, 12

ISO 9001
BUREAU VERITAS
Certification

UKAS QUALITY MANAGEMENT 008

Rathi Transpower Pvt Ltd
Gaia Apex, S. No. 33/2D, Viman Nagar
Pune 411 014.(INDIA)
Phone : 91-20-30517201
Fax : 91-20-30517212
E-mail : enquiry@rathigroup.com
Website : www.rathicouplings.com

Distributor